METRIC

DIMENSIONS ARE IN METRES AND/OR MILLIMETRES UNLESS OTHERWISE SHOWN

CONT No 2013-40-67
WP No 4315-06-01
PART B

CROSBY CREEK BRIDGE STRUCTURE REPLACEMENT

EAST BARRIER WALL

SHEET 316

GENIVAR
JOB NUM. 081-12742-00

LICENSED PROFESSIONAL ENGINEER Z.Y. WASIEWICZ 13/09/16 PROVINCE OF ONTARIO

LICENSED PROFESSIONAL ENGINEER J.E. MARSON 13/09/16 PROVINCE OF ONTARIO

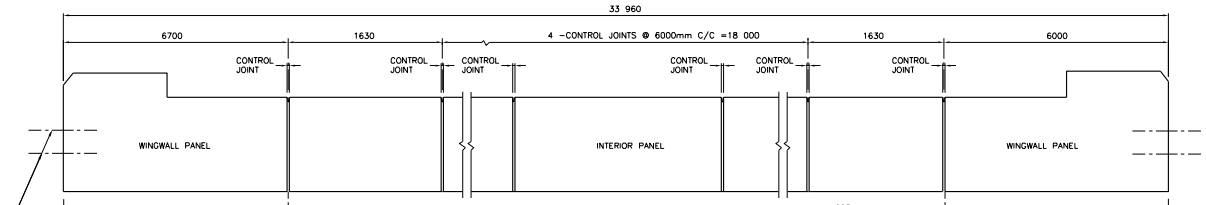

ELEVATION

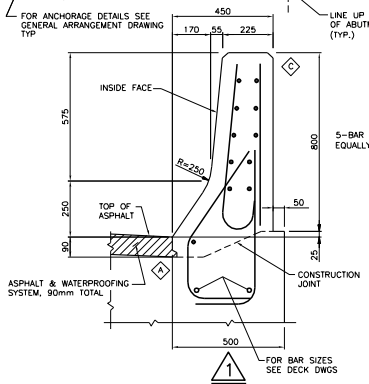

1

BARRIER WALL ON DECK

TYPICAL DIMENSIONS (FOR BAR NUMBERS SEE 2)

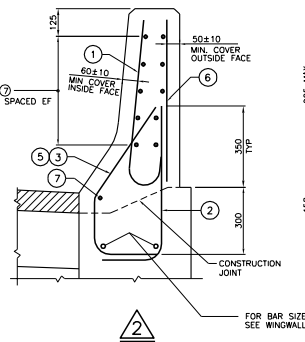

2

BARRIER WALL ON WINGWALL

TYPICAL REINFORCING

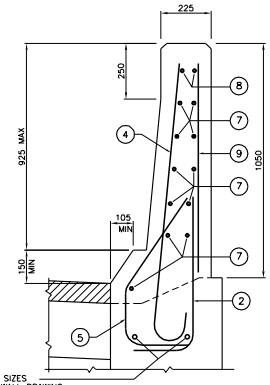

3

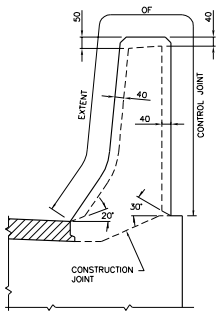

EXTENT OF CONTROL JOINT IN BARRIER WALL

BAR MARK	SIZE	SHAPE
1	GI-15M	160 65 670
2	GI-15M	165 650
3	GI-15M	280 250 500 275
4	GI-15M	160 65 1170
5	GI-15M	250 240 530 300
6	GI-15M	STRAIGHT
7	GI-15M	STRAIGHT
8	GI-15M	STRAIGHT
9	GI-15M	STRAIGHT

NOTES:

1. CHASE REQUIRED ON HIGH AND LOW SIDE OF CROSSFALL.
2. CONCRETE COVER TO REINFORCING 60±10mm EXCEPT AS NOTED.
3. REINFORCING SHALL BE GLASS FIBRE REINFORCED POLYMER (GFRP) GRADE 1. SIZE IN THE BAR SCHEDULE INDICATES GFRP GRADE AND DESIGNATED BAR DIAMETRE.
4. BAR LAP SPLICE FOR HORIZONTAL REINFORCEMENT MUST NOT LAP THROUGH CONTROL JOINT.
5. MINIMUM BAR LAP SPLICE TO BE 550mm, UNLESS OTHERWISE SHOWN.
6. LENGTH OF HORIZONTAL BAR TO SUIT CONTRACTOR'S OPERATIONS. BAR LENGTHS NEED NOT MATCH DISTANCE BETWEEN CONTROL JOINTS.
7. CONTROL JOINT TO BE FORMED.
8. SAWCUTS NOT PERMITTED.
9. CONTROL JOINT FORM HARDWARE NOT TO BE LEFT IN PLACE.
10. OPTIONAL CONSTRUCTION JOINTS TO BE LOCATED WITHIN LIMITS OF CONCRETE DAMS ON DECK OR BALLAST WALL.
11. LEGEND:
    EF - DENOTES EACH FACE
    IF - DENOTES INSIDE FACE
    OF - DENOTES OUTSIDE FACE

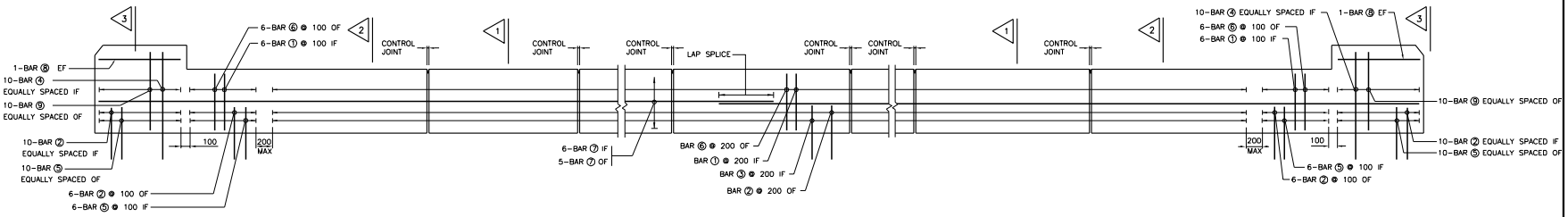

TYPICAL REINFORCING ARRANGEMENT

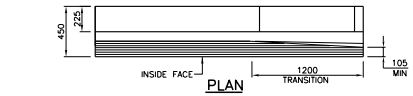

PLAN

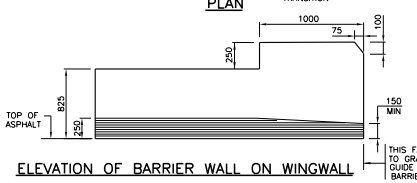

ELEVATION OF BARRIER WALL ON WINGWALL

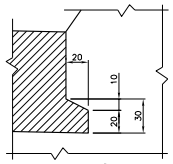

A

CHASE DETAIL

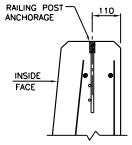

C

POST ANCHORAGE DETAIL

B

TYPICAL CONTROL JOINT

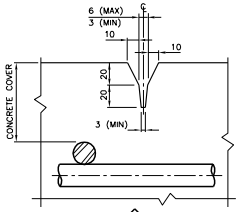

B

CONTROL JOINT DETAIL

DRAWING NOT TO BE SCALED
100 mm ON ORIGINAL DRAWING

APPLICABLE STANDARD DRAWINGS

SS110-21 RAILING FOR BARRIER/PARAPET WALL

MODIFIED

STANDARD DRAWING JANUARY 2013	SS110-58
BARRIER WALL WITH RAILING - PL2 GFRP REBAR	

REVISIONS		
DATE	BY	DESCRIPTION

DESIGN	L.M.	CHK	J.P.	CODE	CHBDC 2006	LOAD	CL-625-ONT.	DATE	SEP. 2013
DRAWN	H.L.	CHK	M.J.B.	SITE	16-023	STRUCT		SCHEME	DWG. 14

METRIC

DIMENSIONS ARE IN METRES AND/OR MILLIMETRES UNLESS OTHERWISE SHOWN

CONT No 2013-40-67
WP No 4315-06-01
PART B

CROSBY CREEK BRIDGE STRUCTURE REPLACEMENT

EAST BARRIER WALL – RAILING

SHEET 317

LICENSED PROFESSIONAL ENGINEER Z.F. WASIEWICZ 13/09/16 PROVINCE OF ONTARIO

LICENSED PROFESSIONAL ENGINEER J.E. MARSON 13/09/16 PROVINCE OF ONTARIO

GENIVAR

JOB NUM. 081-12742-00

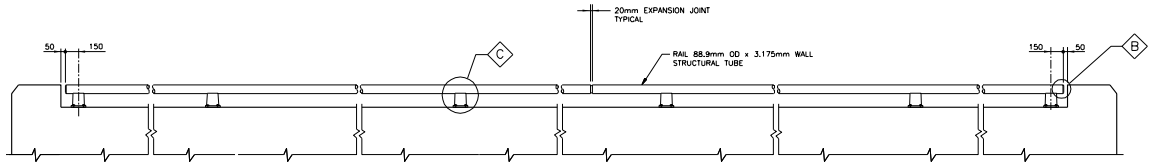

ELEVATION

INSIDE FACE SHOWN

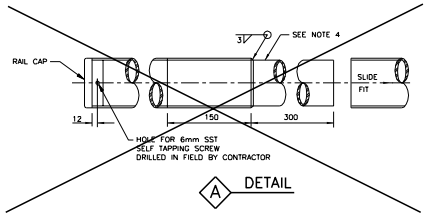

A DETAIL

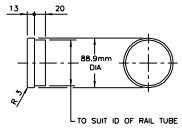

B RAIL CAP

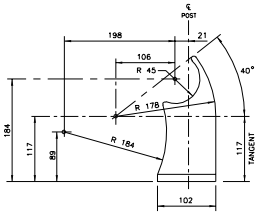

POST DETAILS

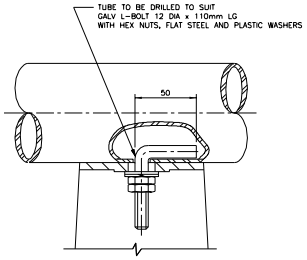

1

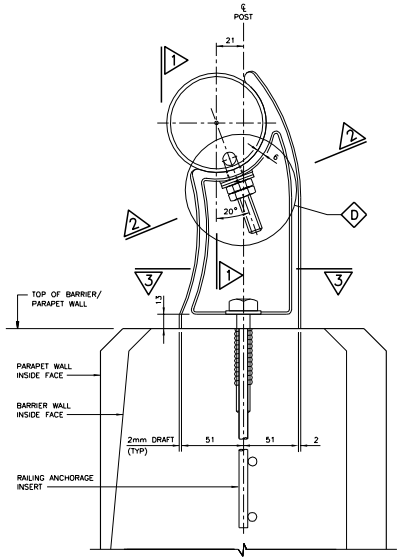

TYPICAL CROSS SECTION

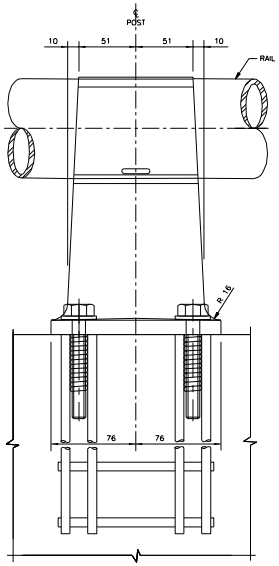

C BACK VIEW

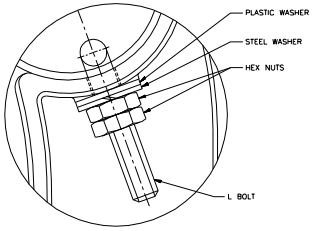

D DETAIL

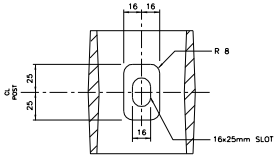

2

L-BOLT NOT SHOWN

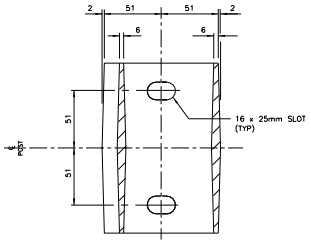

3

	MINIMUM	MAXIMUM
POST* SPACING FOR STEEL RAIL	2 500mm	3 500mm
POST* SPACING FOR ALUMINUM RAIL	2 000mm	2 500mm

* POSTS MAY BE STEEL OR ALUMINUM

NOTES:

1. RAIL ELEMENTS SHALL BE STRUCTURAL TUBING SUPPLIED IN ACCORDING TO CAN/CSA-G40.20-04/G40.21-04 GRADE 350, EXCEPT WHERE NOTED.
2. STEEL IN POSTS SHALL BE CAST STEEL SUPPLIED IN ACCORDANCE WITH ASTM A27-60 GRADE 65-35.
3. RAIL SHALL BE SUPPLIED WITH SPLICE IN LENGTHS OF 6980mm (EXCLUDING SPLICE) EXCEPT AS NOTED.
4. GALVANIZED RAIL TUBING MATING SURFACES TO HAVE A 2 ± 0.5mm GAP ALL AROUND TO ENSURE A SLIDE FIT.
5. STEEL POSTS AND RAILS SHALL BE GALVANIZED IN ACCORDING TO CAN/CSA-G164-M92. ALL GALVANIZING SHALL BE DONE AFTER FABRICATION.
6. ELECTRODES SHALL BE A LOW HYDROGEN SPECIFICATION E7015, E7016 OR E7018.
7. POST AND ANCHORAGE TO INCLUDE ALL BOLTS AND WASHERS.
8. END CAP TO INCLUDE SST SELF TAPPING FASTENERS.
9. L-BOLT, NUT AND WASHERS FOR FASTENING STEEL TUBING TO POSTS SHALL BE GALVANIZED (CSA G164-M92).
10. RAIL CAP MATERIAL SHALL BE STEEL OR ALUMINUM.
11. RAIL SHALL BE PREBENT TO FOLLOW ROAD CURVATURE WHERE RADIUS IS LESS THAN 150m.
12. RAIL POSTS SHALL BE SET PERPENDICULAR TO GRADE.
13. WHERE LAYOUT OF POSTS IS NOT SHOWN, POST LOCATION SHALL BE DETERMINED BY THE CONTRACTOR.
14. RAIL MAY BE CUT AS REQUIRED IN FIELD WITH PIPE CUTTERS. CUT TO BE SURFACE TREATED WITH ZINC RICH PAINT.
15. WHEN CONNECTING TO EXISTING RAILING, RAIL MUST BE MADE CONTINUOUS AND POST SPACING DETERMINED WITH REFERENCE TO EXISTING POSTS.
16. ALTERNATIVE ALUMINUM RAIL AND POST DESIGNS WILL BE PERMITTED. THE RAIL SHALL BE 6061 ALLOY T-6 HEAT TREATED. WHEN AN EXTRUDED POST IS USED, THE ALLOY AND HEAT TREATMENT SHALL BE THE SAME AS SPECIFIED FOR THE RAIL. WHEN A CAST POST IS USED THE ALLOY SHALL BE A 444.2-T4.
17. LENGTH FOR 88.9 mm OD PIPE WITH SPLICE GIVEN IN TABLE DOES NOT INCLUDE 300 mm PROTRUSION OF SPLICE TUBE.
18. SPLICING OF RAIL TUBES MAY BE DONE BY WELDING ON OF SPLICE PIECE OR BY SWEDGING OF RAIL END.
19. RAILING ANCHORAGE INSERT TO BE PLACED PRIOR TO CONCRETING.
20. THE COMBINATION OF STEEL RAIL AND ALUMINUM POSTS IS PERMITTED.
21. ALL 'L' BOLTS SHALL BE INSTALLED AT THE MIDDLE OF THE SLOT AND SHALL BE TIGHTENED TO A CONDITION THAT WILL ALLOW RAIL MOVEMENT.
22. END CAP CAN BE SAND CAST 356 ALUMINUM ALLOY.

ITEM	NO. REQ'D	LINEAR mm	BENDING RADIUS	LOCATION
POST AND ANCHORAGE	13	---	---	---
END CAP	2	---	---	---
88.9 OD PIPE WITH SPLICE (6980mm LG)	3	---	---	DECK
88.9 OD PIPE WITHOUT SPLICE (5460mm LG)	1	---	---	WINGWALL
88.9 OD PIPE WITH SPLICE (5460mm LG)	1	---	---	WINGWALL

APPLICABLE STANDARD DRAWINGS

OPSD 3419.150 BARRIERS AND RAILINGS STEEL SINGLE RAILING ANCHORAGE

MODIFIED

STANDARD DRAWING APRIL 2011	SS110-21
RAILING FOR BARRIER/PARAPET WALL	

REVISIONS			
DATE	BY	DESCRIPTION	

DESIGN	Z.F.W.	CHK	J.M.	CODE	CHBDC 2006	LOAD	O.-625-DW.	DATE	SEP. 2013
DRAWN	H.L.	CHK	M.J.B.	SITE	16-023	STRUCT		SCHEME	DWG. 15

METRIC

DIMENSIONS ARE IN METRES AND/OR MILLIMETRES UNLESS OTHERWISE SHOWN

CONT No 2013-40-67
WP No 4315-06-01
PART B

CROSBY CREEK BRIDGE STRUCTURE REPLACEMENT

WEST BARRIER WALL

SHEET 318

GENIVAR

JOB NUM. 081-12742-00

LICENSED PROFESSIONAL ENGINEER Z.F. WASIEWICZ 13/09/16 PROVINCE OF ONTARIO

LICENSED PROFESSIONAL ENGINEER J.E. MARSON 13/09/16 PROVINCE OF ONTARIO

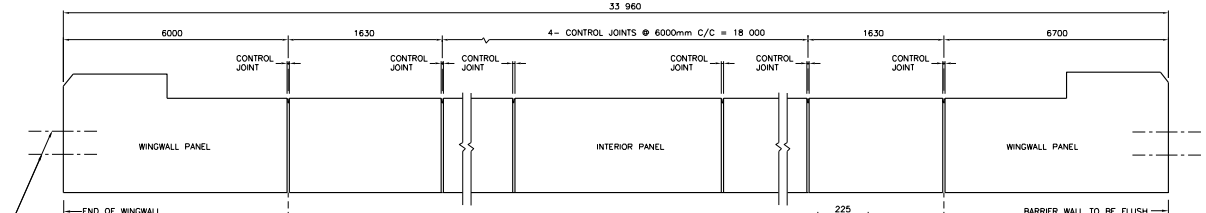

ELEVATION

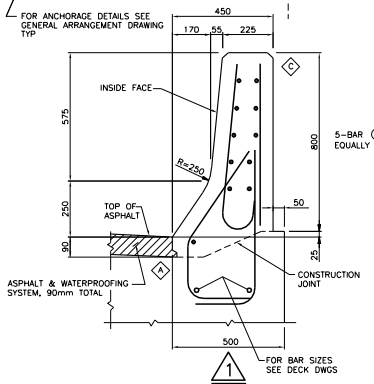

1

BARRIER WALL ON DECK

TYPICAL DIMENSIONS (FOR BAR NUMBERS SEE A)

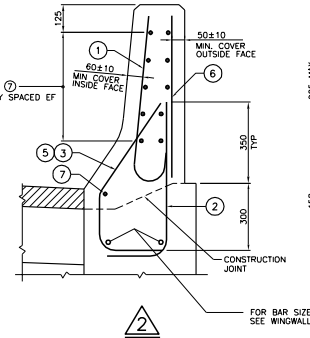

2

BARRIER WALL ON WINGWALL

TYPICAL REINFORCING

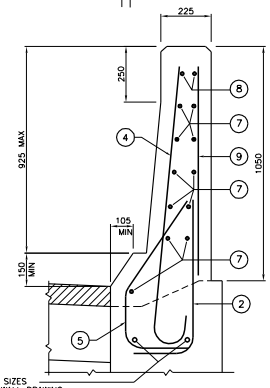

3

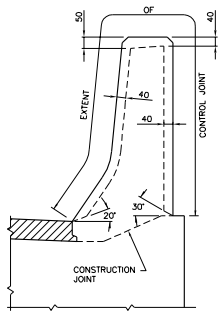

EXTENT OF CONTROL JOINT IN BARRIER WALL

BAR MARK	SIZE	SHAPE
1	G1-15M	160 65 670
2	G1-15M	165 650
3	G1-15M	280 250 500 275
4	G1-15M	150 65 170
5	G1-15M	250 240 530 100
6	G1-15M	STRAIGHT
7	G1-15M	STRAIGHT
8	G1-15M	STRAIGHT
9	G1-15M	STRAIGHT

NOTES:

1. CHASE REQUIRED ON HIGH AND LOW SIDE OF CROSSFALL.
2. CONCRETE COVER TO REINFORCING 60±10mm EXCEPT AS NOTED.
3. REINFORCING SHALL BE GLASS FIBRE REINFORCED POLYMER (GFRP) GRADE 1. SIZE IN THE BAR SCHEDULE INDICATES GFRP GRADE AND DESIGNATED BAR DIAMETRE.
4. BAR LAP SPLICE FOR HORIZONTAL REINFORCEMENT MUST NOT LAP THROUGH CONTROL JOINT.
5. MINIMUM BAR LAP SPLICE TO BE 550mm, UNLESS OTHERWISE SHOWN.
6. LENGTH OF HORIZONTAL BAR TO SUIT CONTRACTOR'S OPERATIONS. BAR LENGTHS NEED NOT MATCH DISTANCE BETWEEN CONTROL JOINTS.
7. CONTROL JOINT TO BE FORMED.
8. SAWCUTS NOT PERMITTED.
9. CONTROL JOINT FORM HARDWARE NOT TO BE LEFT IN PLACE.
10. OPTIONAL CONSTRUCTION JOINTS TO BE LOCATED WITHIN LIMITS OF CONCRETE DAMS ON DECK OR BALLAST WALL.
11. LEGEND:
    EF - DENOTES EACH FACE
    IF - DENOTES INSIDE FACE
    OF - DENOTES OUTSIDE FACE

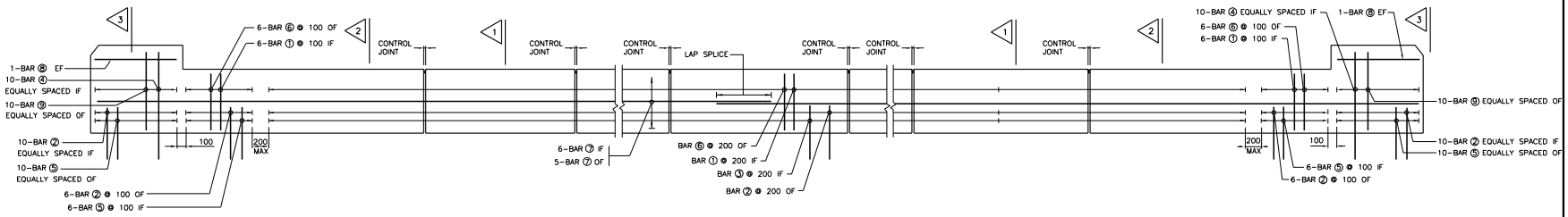

TYPICAL REINFORCING ARRANGEMENT

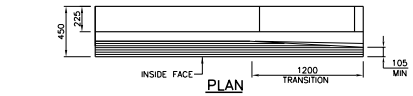

PLAN

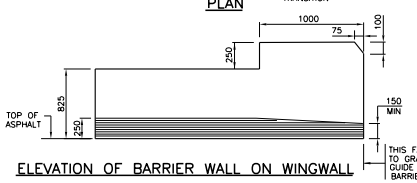

ELEVATION OF BARRIER WALL ON WINGWALL

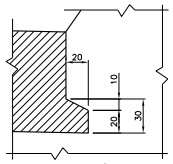

A

CHASE DETAIL

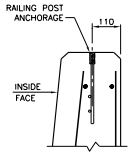

C

POST ANCHORAGE DETAIL

B

TYPICAL CONTROL JOINT

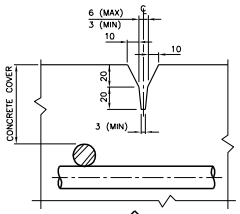

B

CONTROL JOINT DETAIL

DRAWING NOT TO BE SCALED
100 mm ON ORIGINAL DRAWING

APPLICABLE STANDARD DRAWINGS

SS110-21 RAILING FOR BARRIER/PARAPET WALL

MODIFIED

STANDARD DRAWING JANUARY 2013	SS110-58
BARRIER WALL WITH RAILING - PL2 GFRP REBAR	

REVISIONS		
DATE	BY	DESCRIPTION

DESIGN	Z.F.W.	CHK	J.M.	CODE	CHBDC 2006	LOAD	CL-625-ONT.	DATE	SEP. 2013
DRAWN	H.L.	CHK	M.J.B.	SITE	16-023	STRUCT		SCHEME	DWG. 16